Working with Decoders and Multiplexers

Submitted by:

Name	ID
Nawaf Alabdi	B00093759
Ali Abdelatief	B00099836

Submitted to:

Ms. Salsabeel Shapsough

Lab Instructor

American University of Sharjah

College of Engineering

Submitted on:

4/11/2024

Abstract

In this lab we will be making use of active-low decoders to create a circuit that indicates when 3 inputs have an odd number of 1s, a circuit that verifies whether a month given as a binary representation contains only 30 days, and a one-bit full adder. We will also scale up the decoders if needed by combining 2 like decoders to create a larger one.

Introduction

In this lab, we will be dealing with decoders, which are minterm generating devices. We will design logic circuits in LogiSim using decoders that can perform various tasks. The first task will be designing a circuit that takes in a 3-bit binary number and outputs 1 if the number of 1's in the input is odd. Then we will design another circuit that takes in a month number as a 4-bit binary input and outputs 1 if the month has 30 days in it. Lastly, we will design a one-bit full adder using a dual 2:4 decoder.

Theoretical Background

The 74138 is an active-low decoder chip that takes 3 inputs and produces 8 outputs that represent the corresponding maxterm associated with the input combination, which we obtain by converting the binary representation of the string of inputs into decimal, then turning on the output with the corresponding decimal index (0 for active-low), and leaving all other inputs as off (1 for active-low).

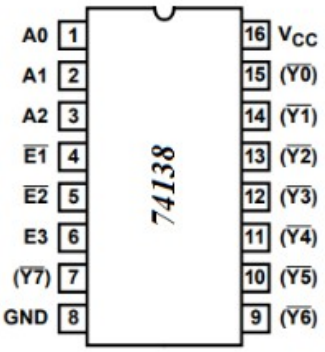

INPUTS						OUTPUTS							
ENABLE			ADDRESS										
E3	E2	E1	A2	A1	A0	Y0	Y1	Y2	Y3	Y4	Y5	Y6	Y7
X	X	H	X	X	X	H	H	H	H	H	H	H	H
L	X	X	X	X	X	H	H	H	H	H	H	H	H
X	H	X	X	X	X	H	H	H	H	H	H	H	H
H	L	L	L	L	L	L	H	H	H	H	H	H	H
H	L	L	L	L	H	H	L	H	H	H	H	H	H
H	L	L	L	H	L	H	H	L	H	H	H	H	H
H	L	L	L	H	H	H	H	H	L	H	H	H	H
H	L	L	H	L	L	H	H	H	H	L	H	H	H
H	L	L	H	L	H	H	H	H	H	H	L	H	H
H	L	L	H	H	L	H	H	H	H	H	H	L	H
H	L	L	H	H	H	H	H	H	H	H	H	H	L

H = High Voltage Level, L = Low Voltage Level, X = Don't Care

Figure 3. Connection Diagram and Function Table of 74138

The active-low decoder allows us to generate any Boolean function by extracting the min-terms or max-terms. As active-low is a max-term generator, by simply connecting all the outputs corresponding to the function's max-terms to an AND gate, we obtain the circuit representing the product of maxterms expression of the function.

We could alternatively take the minterms' indices of the functions represented in the output and connect them to a NAND gate to get a sum of min-terms expressions. This works because given a list of minterms m_0, m_1,…, m_n, the corresponding outputs in the chip gives us M_0, M_1, M_n, which when combined under a NAND gate gives us ~(M_0 . M_1 … M_n) = m_0 + m_1 + … + m_n using DeMorgan's law and the fact that ~M_i = m_i.

Given two n:2^n decoders with enabler pins, it is possible to combine them in a circuit such that they form an n+1:2^n+1 decoder. We do this by connecting the input pins (variables) on both chips to the same sequence of pins and adding a new pin (variable) which connects to both decoders' enabling pin. One of the wires that lead to either decoders must be inverted,

depending on whether we are working with active-low or active-high decoders, refer to the truth table to decide. For example, we can build a 2:4 active-low decoder using two 1:2 active-low decoders as follows.

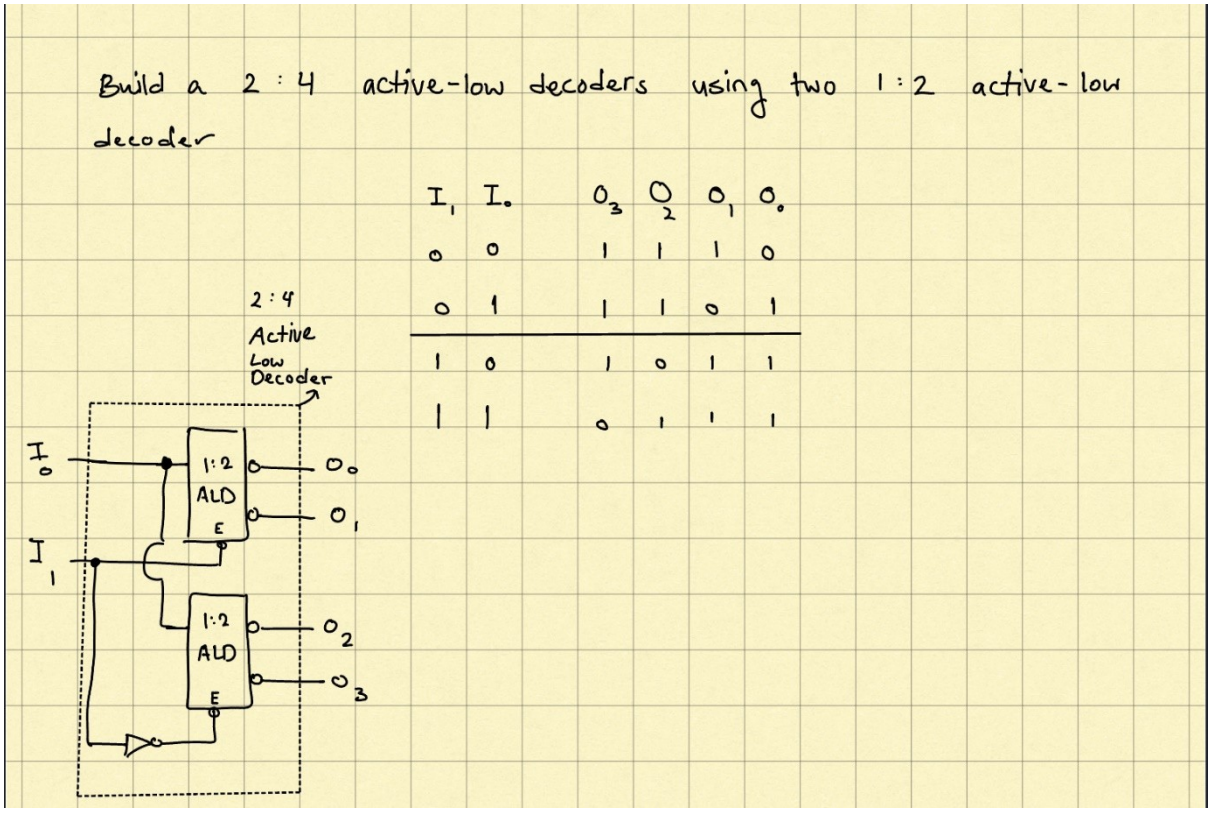

Experimental work, Results and Discussion

Exercise 1:
A given circuit outputs a 1 when a 3-bit binary number has an odd number of 1s, and 0 otherwise. Build the circuit using the 74138 (3-to-8 decoder) chip and any necessary extra gates.

- List the truth table of the circuit.
- Implement the circuit on LogiSim Evolution

A	B	C	F(A,B,C)
0	0	0	0
0	0	1	1
0	1	0	1
0	1	1	0
1	0	0	1
1	0	1	0
1	1	0	0
1	1	1	1

$F(A,B,C) = M_0.M_3.M_5.M_6$

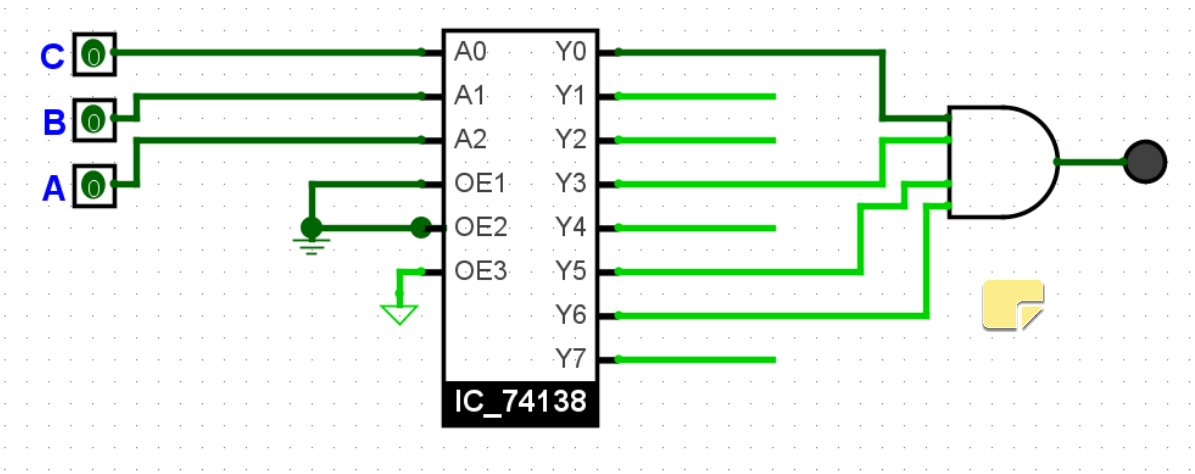

Exercise 2:
A given circuit accepts a 4-bit input which represents a month (e.g., input 0001 represents January). The circuit should output a one if a given month has only 30 days in it. Design the circuit using the 74138 (3-to-8 decoder) chip shown above and any necessary extra gates.

- List the truth table of the circuit.
- Implement the circuit on LogiSim Evolution

A	B	C	D	F(A,B,C,D)
0	0	0	0	X
0	0	0	1	0
0	0	1	0	0
0	0	1	1	0
0	1	0	0	1
0	1	0	1	0
0	1	1	0	1
0	1	1	1	0
1	0	0	0	0
1	0	0	1	1
1	0	1	0	0
1	0	1	1	1
1	1	0	0	0
1	1	0	1	X
1	1	1	0	X
1	1	1	1	X

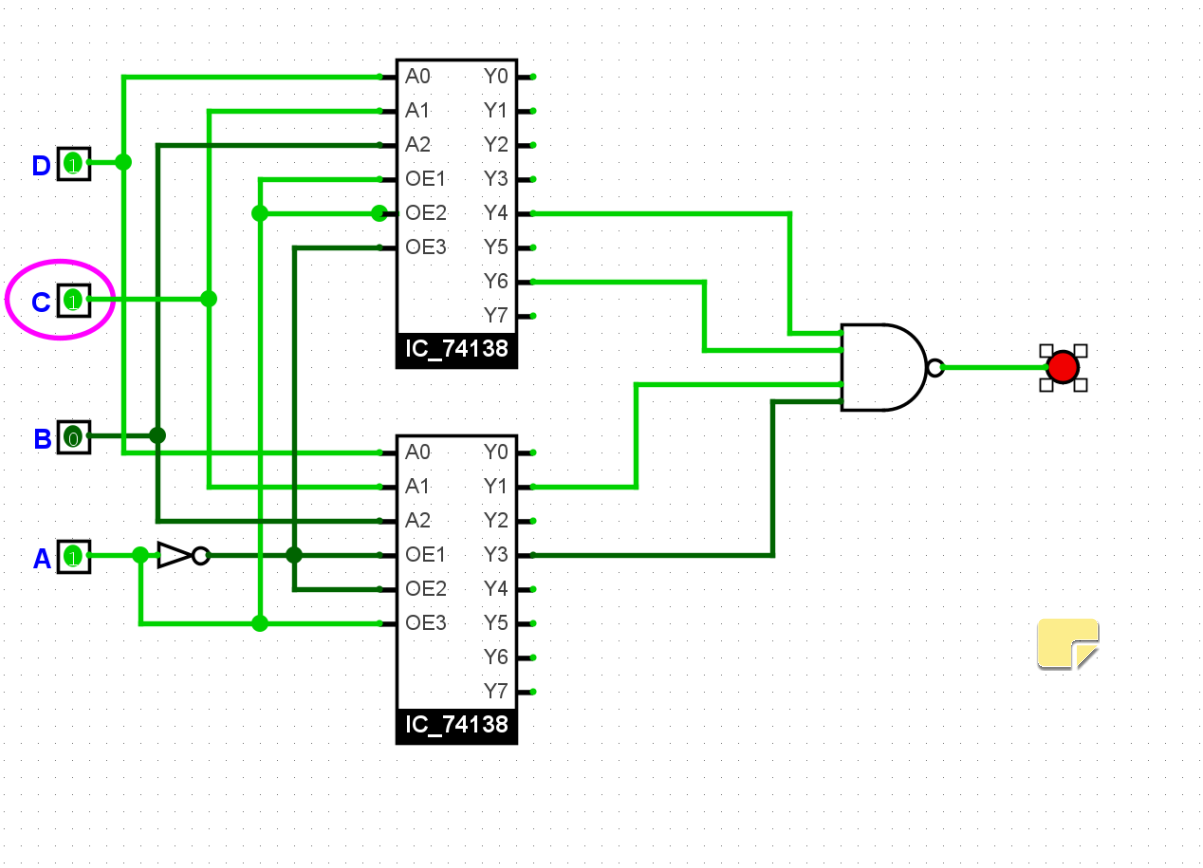

Exercise 3:
Design a one-bit full adder using 74139 (dual 2-to-4 decoder) chip and any necessary logic gates.

- List the truth table of the circuit.
- Implement the circuit on LogiSim Evolution

A	B	C_{in}	C_{out}	S
0	0	0	0	0
0	0	1	0	1
0	1	0	0	1
0	1	1	1	0
1	0	0	0	1
1	0	1	1	0
1	1	0	1	0
1	1	1	1	1

$C_{out} = M_0 . M_1 . M_2 . M_4$

$S = M_0 . M_3 . M_5 . M_6$

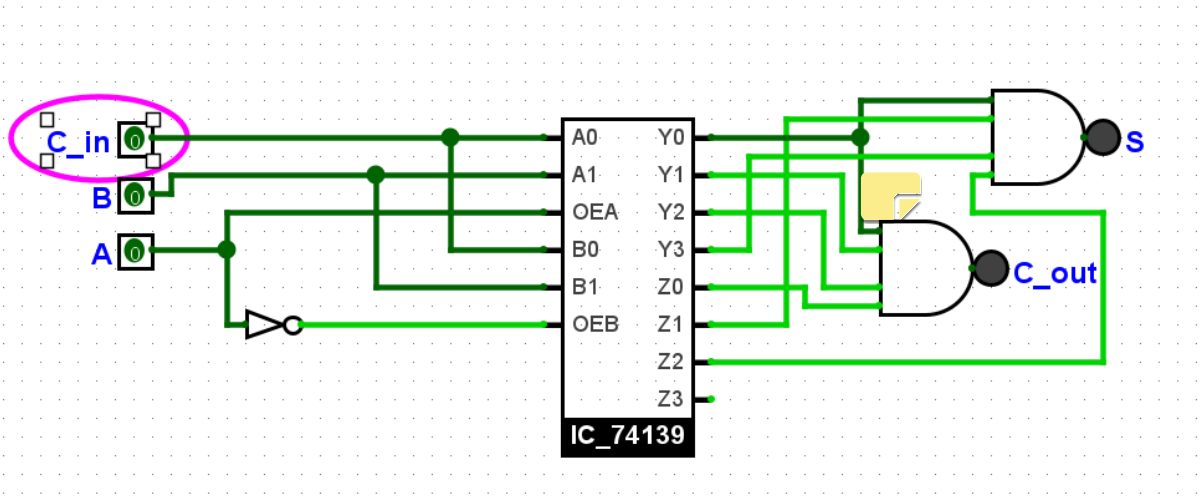

Conclusion

In this lab, we went over the decoders and how to use them to build logic circuits. We designed circuits in LogiSim using decoders, and since they are minterm generators, it is fairly easy to come up with many circuit designs that can offer different functionalities using decoders.